UNIMECH GROUP, MALAYSIA

A MEMBER OF UNIMECH GROUP, MALAYSIA

STAINLESS STEEL SWING CHECK VALVE FLANGED END JIS 10K

(size 15mm~50mm)

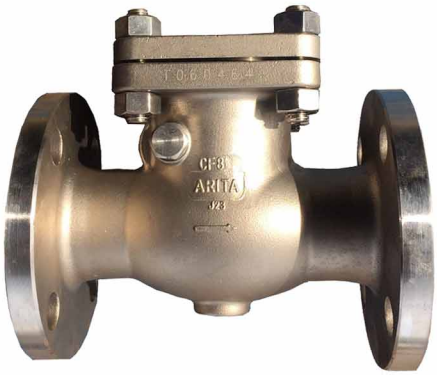

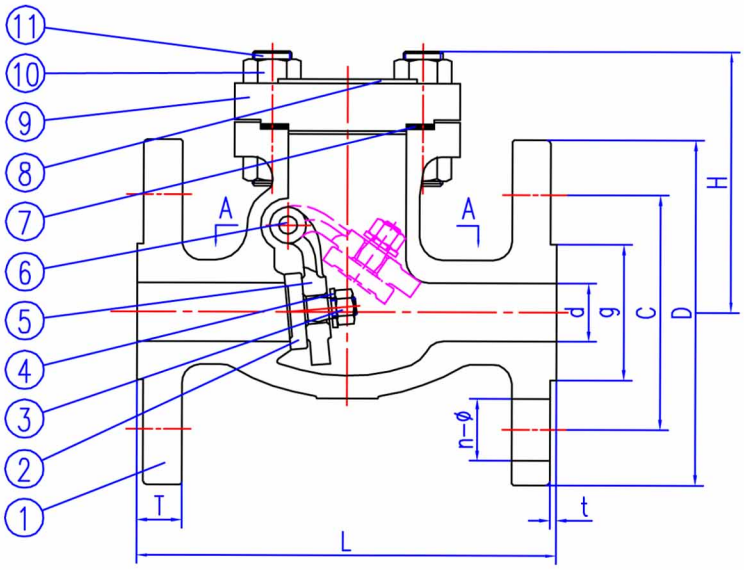

A–A VIEW

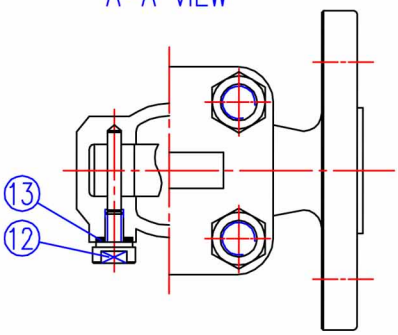

Features :

Pressure - Temperature Rating : JIS B2071

Face to Face : JIS B2002

Flange Connection Dimensions : JIS B2220

Inspection and Test : JIS B003

Shell Test : 3.1 Mpa

High Pressure Sealing Test : 2.2 Mpa

Technical Data

Material

No.	PART	MATERIAL	
1	BODY	A351-CF8	A351-CF8M
2	DISC	A351-CF8	A351-CF8M
3	NUT	A194-8	A194-8M
4	WASHER	A276-304	A276-316
5	HINGE	A351-CF8	A351-CF8M
6	HINGE PIN	A276-304	A276-316
7	GASKET	PTFE	PTFE
8	NAMEPLATE	A276-304	A276-316
9	BONNET	A351-CF8	A351-CF8M
10	NUT	A194-8	A194-8M
11	BOLT	A193-B8	A193-B8M
12	PLUG	A276-304	A276-316
13	GASKET	PTFE	PTFE

Dimension in mm

SIZES		d	L	D	C	g	T	t	n-Ø	H
DN	in.									
15	1/2”	15	108	95	70	51	12	1	4-15	79.5
20	3/4”	20	117	100	75	56	14	2	4-15	84
25	1”	25	127	125	90	67	14	2	4-19	89
32	1.1/4”	32	165	135	100	76	16	2	4-19	102
40	1.1/2”	40	165	140	105	81	16	2	4-19	102
50	2”	50	203	155	120	96	16	2	4-19	113.5

The contents of this literature are for informative purposes only. Arita is not responsible for suitability or compatibility of these products in relation to system requirement. For specific requirements, consult Arita or its distributors. Arita reserves the right to change or modify product design without prior notice.

UNIMECH GROUP, MALAYSIA

A MEMBER OF UNIMECH GROUP, MALAYSIA

STAINLESS STEEL SWING CHECK VALVE FLANGED END JIS 10K

(size 65mm~300mm)

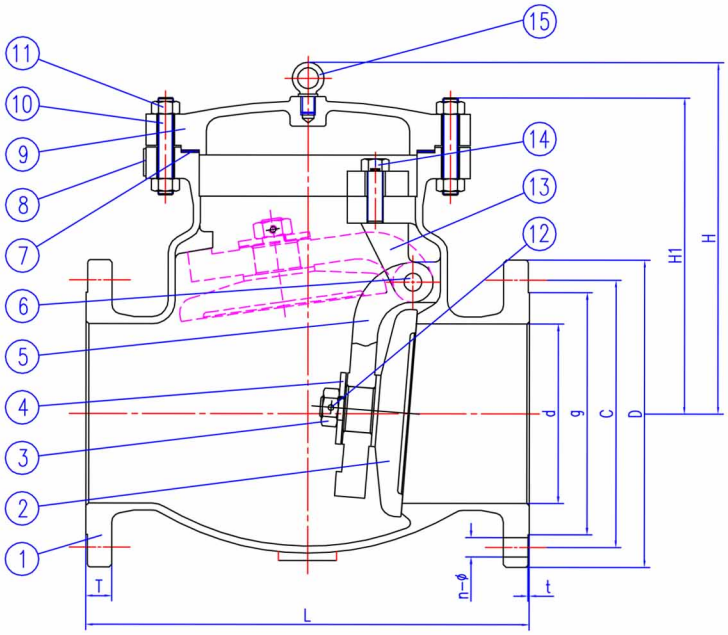

Features :

Pressure - Temperature Rating : JIS 2071
Face to Face : JIS B2002
Flange Connection Dimensions : JIS B2220
Inspection and Test :JIS B2003
Shell Test : 3.1 Mpa
High Pressure Sealing Test : 2.2 Mpa

Technical Data

Material

No.	PART	MATERIAL	
1	BODY	A351-CF8	A351-CF8M
2	DISC	A351-CF8	A351-CF8 M
3	NUT	A194-8	A194-8M
4	WASHER	A276-304	A276-316
5	HINGE	A351-CF8	A351-CF8M
6	HINGE PIN	A276-304	A276-316
7	GASKET	PTFE	PTFE
8	NAMEPLATE	A276-304	A276-316
9	BONNET	A351-CF8	A351-CF8M

No.	PART	MATERIAL	
10	BOLT	A193-B8	A193-B8M
11	NUT	A194-8	A194-8M
12	PIN	A276-304	A276-316
13	YOKE	A351-CF8	A351-CF8M
14	BOLT	A193-B8	A193-B8M
15	BOLT	STEEL (≥5”)	STEEL (≥5”)

Dimension in mm

SIZES		d	L	D	C	g	T	t	n-Ø	H1	H
DN	in.										
65	2.1/2”	64	216	175	140	116	18	2	4-19	157	-
80	3”	76	241	185	150	126	18	2	8-19	168	-
100	4”	102	292	210	175	151	18	2	8-19	222	-
125	5”	127	330	250	210	182	20	2	8-23	-	304.5
150	6”	152	356	280	240	212	22	2	8-23	-	350
200	8”	200	495	330	290	262	22	2	12-23	-	407
250	10”	250	622	400	355	324	24	2	12-25	-	463
300	12”	300	698	445	400	368	24	2	16-25	-	538

The contents of this literature are for informative purposes only. Arita is not responsible for suitability or compatibility of these products in relation to system requirement. For specific requirements, consult Arita or its distributors. Arita reserves the right to change or modify product design without prior notice.

UNIMECH

UNIMECH GROUP, MALAYSIA

ARITA

A MEMBER OF UNIMECH GROUP, MALAYSIA

STAINLESS STEEL SWING CHECK VALVE FLANGED END JIS 10K

(size 350mm~600mm)

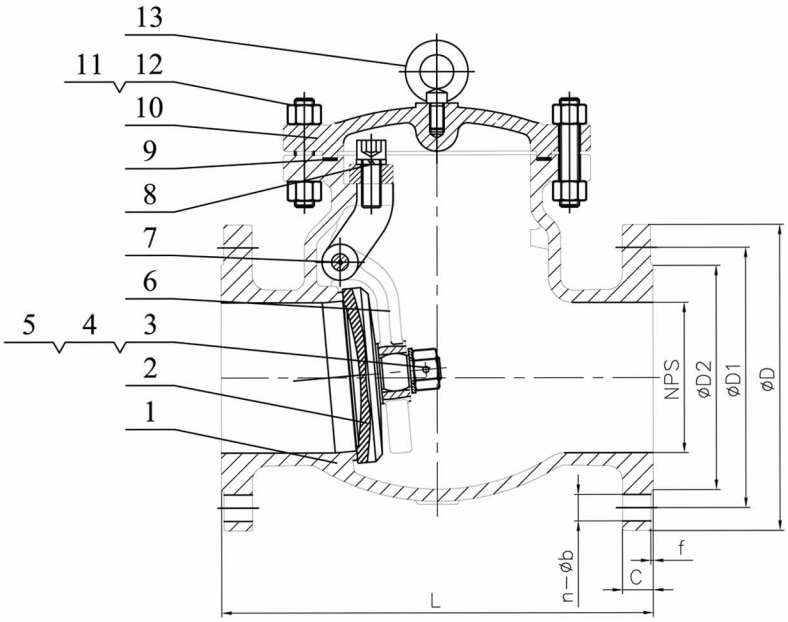

Features :

Pressure - Temperature Rating : JIS B2071
Face to Face : JIS B2002
Flange Connection Dimensions : JIS B2220
Inspection and Test : JIS 2003
Shell Test : 3.0 Mpa
High Pressure Sealing Test : 2.2 Mpa
Temperature : -29~425℃

Technical Data

Material

No.	PART	MATERIAL	
1	BODY	A351-CF8	A351-CF8M
2	DISC	A351-CF8	A351-CF8 M
3	PIN	SS304	SS304
4	NUT	A194 8	A194 8M
5	WASHER	SS304	SS304
6	HINGE	A351 CF8	A351 CF8M
7	HINGE PIN	SS304	SS304
8	BOLT	A193 B8	A193 B8
9	GASKET	SS304+GRAPHITE	SS304+GRAPHITE

No.	PART	MATERIAL	
10	BONNET	A351-CF8	A351-CF8M
11	STUD	A193 B8	A193 B8
12	NUT	A194 8	A194 8
13	EYE SCREW	S.S	S.S

Dimension in mm

SIZES		L	D	D1	D2	C	f	n-Øb
DN	in.							
350	14”	787	535	476.3	413	35.4	2	12-Ø29
400	16”	864	595	540	470	37	2	16-Ø29
450	18”	978	635	578	533	40	2	16-Ø32
500	20”	978	700	635	584	43	2	20-Ø32
600	24”	1295	815	749	692	48	2	20-Ø35

The contents of this literature are for informative purposes only. Arita is not responsible for suitability or compatibility of these products in relation to system requirement. For specific requirements, consult Arita or its distributors. Arita reserves the right to change or modify product design without prior notice.